SUU Physics Program Review

September 12, 2012

Physics Learning Outcomes utilize the list of Discipline-Specific Learning Outcomes (1-7) as developed by the Utah Physics Group of Tuning Project. Accomplishment in each LO is rated according to Levels of Sophistication (rated 1-9) appropriate for the 2-year (Associate's, Minor), 4-year (Bachelor's, Major) and 6-year (Master's) courses of study in Physics.

More detail on the Physics Learning Outcomes and Levels of Sophistication follow the mapping below. Examples of implementation of the above Levels of Sophistication to the Physics Learning Outcomes are given at the end of the document.

A. Physics Knowledge

Understanding the Nature of Science and Nature of Physics (1)
Understanding of Physics Concepts (3)

B. Physics Skills

Mathematical, Modeling, and Problem Solving Skills (2)
Laboratory Skills (4)
Computational and Informational Skills (6)

C. Professional Development Skills

Scientific Communication Ability (5)
Research Ability (7)

For each of the competencies listed below, <u>the student will demonstrate</u>

<u>1. Understanding of the Nature of Science and Nature of Physics</u>

- Understanding of the role of evidence
- Understanding of the role of experiment in physics
- Understanding of the role of research in physics and the variety of approaches to research
- Understanding of cause and effect
- Understanding of scientific ethics
- Understanding of science as a community effort
- Understanding of major historical threads in the development of physics

<u>2. Mathematical Skills, Modeling Skills, and Problem Solving Skills</u>

- Algebra, calculus, and manipulation skills
- Understanding of the meaning of mathematics in physical context:
    - Ability to connect physical quantities and algebraic symbols
    - Understanding of the physical meaning of vector algebra
    - Understanding of the contexts for equations
- Estimation skills
- Graphical skills and interpretation

- Ability to build physical models by abstracting the most important concepts
    - Understanding of what one can learn from simple models
- Ability to build and work with mathematical models
    - Ability to cast story problems into mathematical models
    - Ability to explain the physics in a mathematical model
    - Ability to explain the differences between problem solving and modeling
- Ability to map problems to new problems with similar mathematics but different physics
- Ability to organize problems by identifying physical principles, identifying relevant vs. irrelevant quantities, and making appropriate diagrams
- Ability to organize quantitative information by clearly stepping through the mathematics of the problem solution

<u>3. Understanding of Physics Concepts</u>

- Basic understanding of the major threads of physics concepts: conservation laws, forces (gravity, e&m), fields, Newton's laws, work and energy, optics, thermodynamics, relativity, quantum mechanics
- Understanding of contexts of physics applications by identifying key elements in the functioning of an arbitrary physical system and relating them to model construction

<u>4. Laboratory Skills</u>

- Skills necessary for safe practice
- Understanding of and commitment to laboratory safety
- Ability to carry out error analysis, understanding what errors mean
- Understanding the primacy of data in physics
- Understanding how to evaluate data quality and the importance of such evaluation
- Understanding how things get measured
- Understanding the connections between what one measures and how one infers the physical interpretation of the measurements
- Understanding how to collect, organize, and present data and connect it to physical principles

<u>5. Scientific Communication Ability</u> (written, oral, and visual communication)

- Writing ability: complete, punctuated sentences, organization, good logic
- Scientific writing ability: be able to explain in words rather than equations
- Presentation skills: informal presentations to peers, formal presentations
- Teaching ability at BS/BA and MS/MA levels; ability to impart knowledge to others

<u>6. Computational and Information Skills</u>

- Ability to use scientific packages intelligently
- Knowledge of the rudiments of scientific programming
- Ability to use Excel or similar; Maple, MatLab or similar computer algebra
- Understanding of numerical analysis
- Information literacy at appropriate levels

<u>7. Research</u>

- Ability to apply physics competencies semi-independently
- Ability to synthesize physics principles and applications
- Ability to present research motivations, findings, and significance

Mapping of Physics Learning Outcomes to SUU Learning Outcomes

	Physics Learning Outcomes		
SUU LO	**A**	**B**	**C**
1	x		
2a		x	
2b		x	
2c			x
2d		x	
2e		x	
2f		x	x
3a			
3b			
3c	x		
3d			
4a			x

Curriculum Matrix for:

Physics Minor

Physics Teacher Education Minor

Physics Minor	**Physics Learning Outcomes**		
Course	**A**	**B**	**C**
PHYS 2210	**X**	x	
PHYS 2215		**X**	x
PHYS 2230			x
PHYS 2220	**X**	x	
PHYS 2225		**X**	**X**
PHYS 2260			x
PHYS 3310	x	x	x
PHYS 3320	x	x	**X**
ENGR 2270	x	x	
ENGR 2275		x	x

X indicates course being assessed

Sample Assessment Questions (answers bold)

For PHYS 2210 (Learning Outcome A)

Objects A and B have the same momentum but B has twice the mass of A. Which of the following is true?

a. Both objects have the same kinetic energy
b. One object has 1.4 times the kinetic energy of the other.
c. One object has twice the kinetic energy of the other.
d. One object has 4 times the kinetic energy of the other.

For PHYS 2215 (Learning Outcome B)

In an experiment to measure the acceleration due to gravity *g*, you use a range finder to measure the vertical position *y* of a falling object at different times *t*. When plotting your data (y vs. t), which of the following methods could you use to extract the value of *g*?

a. Find the average of the y values, $\bar{y}$, the average of the t values $\bar{t}$, then compute $g = \bar{y}/\bar{t}^2$
b. Fit a straight line to the data $y = mt + b$; the slope *m* is equal to *g*.
c. Fit a parabola to the data $\boldsymbol{y = a + bt + ct^2}$; the constant *c* is equal to *g*/2, so *g=2c.*
d. Fit an exponential to the data $y = a\, e^{-bt}$; the combination ab^2 is equal to *g*.

Scoring Rubric

Achievement towards LO will be determined using the percentage *P* of students answering the above question correct. Corrective action will involve a convening of a curriculum committee to assess the course, learning outcome and assessment question for subsequent reviews, and determine proper corrective measures for the course instructor(s).

$P \geq 70\%$	Satisfactory achievement; no action needed.
$60\% \leq P < 70\%$	Marginal achievement; action taken if marginal on subsequent review.
$P < 60\%$	Unsatisfactory achievement; action taken.

Sample Assessment Questions (answers bold)

For PHYS 2210 (Learning Outcome A)

1. Objects A and B have the same momentum but B has twice the mass of A. Which of the following is true?
   a. Both objects have the same kinetic energy
   b. One object has 1.4 times the kinetic energy of the other.
   c. One object has twice the kinetic energy of the other.
   d. One object has 4 times the kinetic energy of the other.

For PHYS 2215 (Learning Outcome B)

2. In an experiment to measure the acceleration due to gravity *g*, you use a range finder to measure the vertical position *y* of a falling object at different times *t*. When plotting your data (y vs. t), which of the following methods could you use to extract the value of *g*?
   a. Find the average of the y values, $\bar{y}$, the average of the t values $\bar{t}$, then compute $g = \bar{y}/\bar{t}^2$
   b. Fit a straight line to the data $y = mt + b$; the slope *m* is equal to *g*.
   c. Fit a parabola to the data $\boldsymbol{y = a + bt + ct^2}$; the constant *c* is equal to *g*/2, so *g*=2*c*.
   d. Fit an exponential to the data $y = a\, e^{-bt}$; the combination ab^2 is equal to *g*.

Scoring Rubric

Achievement towards LO will be determined using the percentage *P* of students answering the above question correct. Corrective action will involve a convening of a curriculum committee to assess the course, learning outcome and assessment question for subsequent reviews, and determine proper corrective measures for the course instructor(s).

$P \geq 70\%$	Satisfactory achievement; no action needed.
$60\% \leq P < 70\%$	Marginal achievement; action taken if marginal on subsequent review.
$P < 60\%$	Unsatisfactory achievement; action taken.

Fall 2011 Assessment

The above questions were inserted into the final exam for PHYS 2210 (taught by Prof. Chisholm). It should be noted that the second question is technically for PHYS 2215 – the associated lab for PHYS 2210 – though the lab does not have a final exam, for preliminary assessment it was placed on the final for the class (as the lecture and lab are co-requisites, it is expected that students should be capable of answering the question, even if its nature is unexpected).

For N=51 students taking the final exam, 41 got Question 1 correct (80.4%) and 18 got Question 2 correct (35.3%). Thus, achievement was satisfactory for Question 1 (for Learning Outcome A), but unsatisfactory for Question 2 (for Learning Outcome B).

Spring 2012 Physics Program Assessment Results

PHYS 2210 Spring 2012 Final Exam

Objects A and B have the same momentum but B has twice the mass of A. Which of the following is true?

a. One object has twice the kinetic energy of the other.
b. One object has 4 times the kinetic energy of the other.
c. One object has $\sqrt{2}$ times the kinetic energy of the other.
d. Both objects have the same kinetic energy.

Learning Outcome A (Physics Knowledge)

Result: 26/36 correct -> P= 72.2%. No action necessary.

PHYS 2210 Spring 2012 Final Exam

In an experiment to measure the acceleration due to gravity *g*, you use a range finger to measure the vertical position *y* (with up being positive) of a falling object at different times *t*. After creating a position graph (*y* vs. *t*), which of the following methods could you use to extract the value of *g*?

a. Find the average of the *y* values ($\bar{y}$), the average of the t values ($\bar{t}$), then $g = \bar{y}/\bar{t}^2$.
b. Fit a parabola $y = a + bt + ct^2$ to the data; then $g = -2c$.
c. Fit a straight line $y = mt + b$ to the data; then $g = m$.
d. Fit an exponential curve $y = ae^{-bt}$ to the data; then $g = -ab^2$.

Learning Outcome B (Physics Skill)

Result: 17/36 correct -> P=47.2%. **ACTION NECESSARY.**

Discussed with Profs. Sorensen and Hanson; question is valid, though a graph of a mock data set may be useful for clarification. Topic will be emphasized in future offerings of PHYS 2215 (Lab).

Spring 2012 Physics Program Assessment Results

PHYS 2220 Spring 2012 Exam #4

Four resistors, each with resistance *R*, are in parallel in a circuit. They are replaced by one equivalent resistor R_{eq}. Compare this equivalent resistor to the first resistor of the initial circuit. Which of the following statements is true?

a. The current through R_{eq} equals the current through the resistor *R*.
b. The power dissipated by R_{eq} equals the power dissipated by the resistor *R*.
c. The voltage across R_{eq} equals the voltage across the resistor *R*.
d. $R_{eq} > R$

Learning Outcome A (Physics Knowledge)

Result: 17/23 correct -> P=73.9%. No action necessary.

PHYS 2220 Spring 2012 Exam #4

Determine the currents through and voltages across each resistor in the circuit shown.

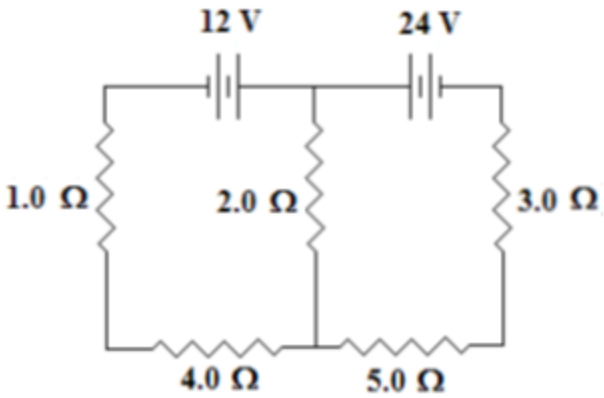

Learning Outcome B (Physics Skill)

Result: 20/23 correct -> P=87.0%. No action necessary.

PHYS 3320 Spring 2012 Final Project

Independently research a topic of interest to you that is related to material covered in this course, with instructor approval. Present the results of this research in a 3-5 paper.

Learning Outcome C (Professional Development Skills)

Result: 2/2 correct -> P=100%. No action necessary.